ITEM NO.	PART NUMBER	DESCRIPTION	QTY.	NOTES
1	50-00026	Connector, dc plug, 5.5x2.5xL23 mm, molding style, spring contacts	1	
2	30-00415	Wire, 2C TS, 18 AWG, UL2468, 300V, 80°C, 4.4 mm, VW-1, PVC, 87A, red and black	1	
3	24-00003	Overmold, PVC, black	1	

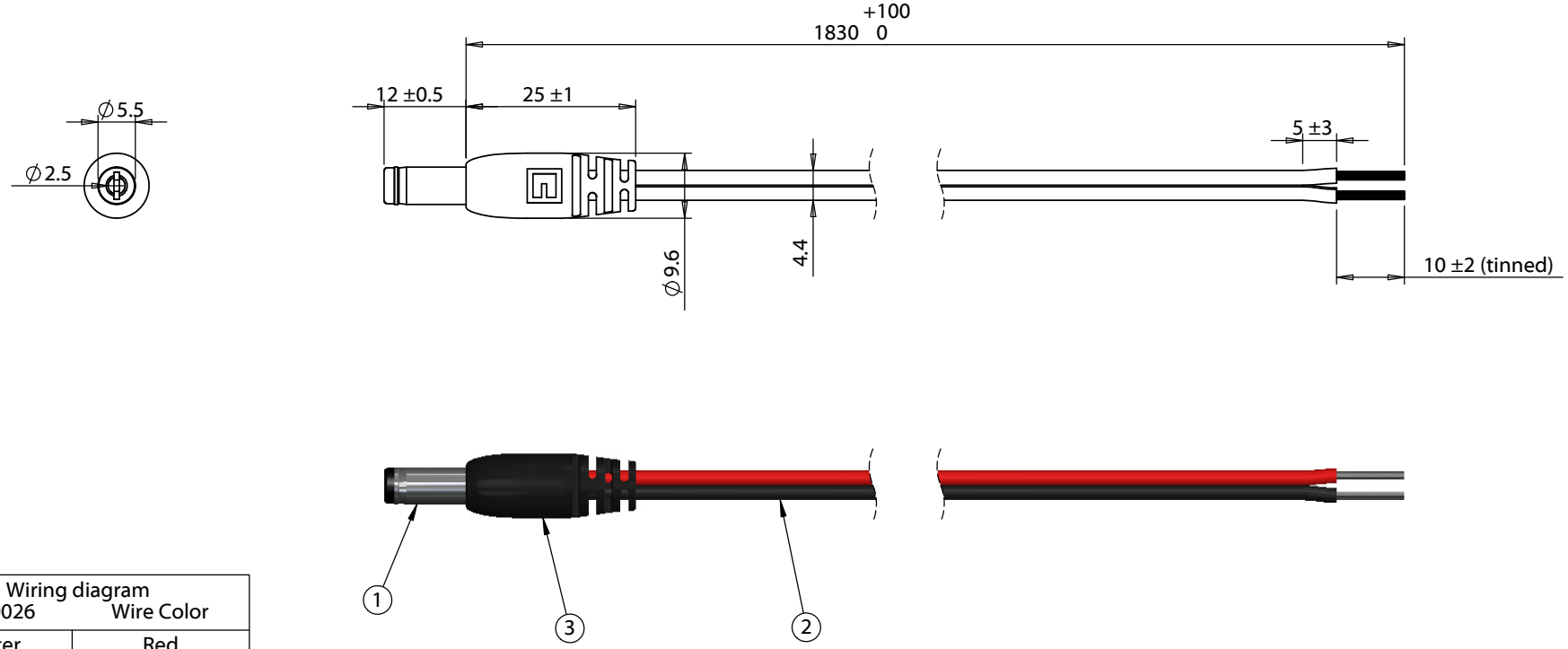

Wiring diagram 50-00026	Wire Color
Center	Red
Sleeve	Black

REVISION	DATE	DESCRIPTION
A	7/25/2014	Initial release
A1	4/30/2015	Updated notes section

PREPARED:
AG 2015.04.30 10:27:16 -07'00'

VERIFIED:
JM
2015.05.01 08:05:35 -07'00'

DIMENSIONS ARE IN MILLIMETERS

TOLERANCES:
X: ± 0.5 mm
X.X: ± 0.3 mm
X.XX: ± 0.05 mm

NOTES
Rated for 7 A, 12 Vdc

RoHS and REACH compliant

Function test: no open, no reversed polarity, no short circuit, no INT

Functionally equivalent components may be used

DESCRIPTION:
Cable, 1830 mm, 5.5x2.5x12 mm 50-00026 dc plug to 10 mm tinned, 18 AWG, 30-00415 R-B wire

TENSILITY
20802 Sockeye Place #130
Bend, OR 97701 USA
tel 541.323.3228 *fax* 541.323.4202
800 877.670.7118 www.tensility.com

SIZE	PART NUMBER
A	10-01775

SCALE: 1:1	WEIGHT:	SHEET 1 OF 1

5 4 3 2 1