PRODUCT NO.	QTY/REEL
76693–001	25 M
76693–002	5 M

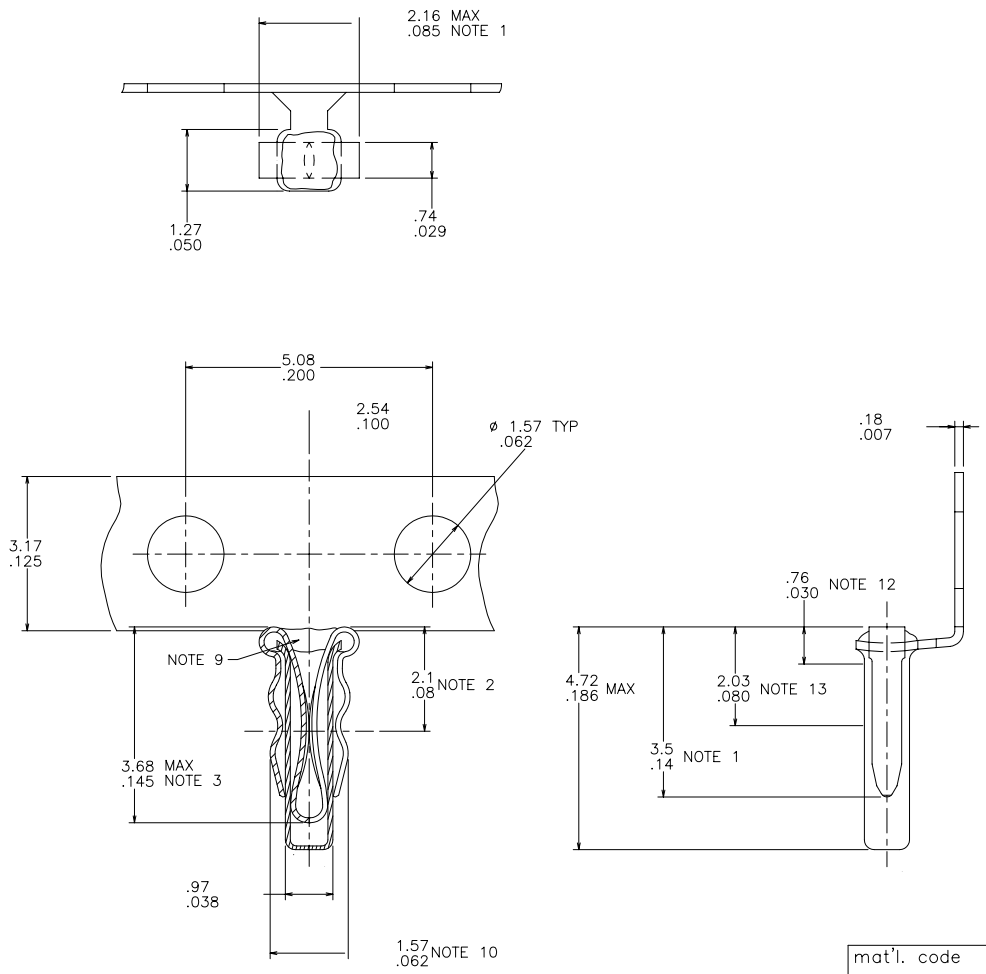

NOTES:

1. DIMENSIONS APPLY PRIOR TO INSTALLATION.
2. SHOWS CENTERLINE OF THEORETICAL POINT OF CONTACT FROM TOP OF SPRING.
3. SHOWS MAX DEPTH FOR .51/.020 LEAD FROM TOP OF SPRING.
4. THE SOCKET ASSY SHALL BE MACHINE INSERTABLE AND SELF–RETAINING DURING WAVE SOLDERING IN HOLES FROM 1.27/.050 TO 1.47/.058 DIA.
5. THE SPRING SHALL SOLDER TO THE CUP DURING WAVE SOLDERING IN SINGLE OR DOUBLE SIDED BOARDS TO 1.57/.062 THK, NO SOLDER SHALL ENTER CUP.
6. THE SOCKET SHALL ACCEPT ROUND LEADS FROM .30/.012 TO .56/.022 DIA AND FLAT LEADS, WHEN PROPERLY ORIENTED, FROM .20/.008 TO .38/.015 THK BY .38/.015 TO .58/.023 WIDE.
7. CUP MATERIAL: GILDING MATERIAL PER MIL C21768
   SPRING MATERIAL: BeCu PER QQ–C–533
8. CUP PLATING: TIN–LEAD 60/40, .76μ/30μ" MIN THK
   SPRING PLATING: 76μ/30μ" Au (MIL–G–4520B) TYPE IC, OVER 1.01μ/40μ" MICKEL (QQ–N–290).
9. RTV APPLIED TO AREA SHOWN TO PREVENT FLUX AND SOLDER FROM ENTERING SOCKET DURING WAVE SOLDERING.
10. DIM APPLIES WHEN TIP OF SPRING IS IN CONTACT WITH OUTSIDE OF CUP.
11. SEE PRODUCT SPECIFICATION NO 12–006 FOR INSERTION/WITHDRAWAL FORCES.
12. .76/.030 DIM REFERS TO INSTALLED HEIGHT 1, ABOVE BOARD.
13. 2.03/.080 DIM REFERS TO INSTALLED HEIGHT 2, ABOVE BOARD.

ltr	ecn no	dr	date
F	REDRAWN	RLS	5/8/87
G	M06–0278	MHT	7/22/06

dr	R.SEIPLE	5/8/87
engr	H.SUNDY	5/8/87
chr	H.SUNDY	5/8/87
appd	H.SUNDY	5/8/87

mat'l. code: –
surface: ISO 1302
tolerance: ISO 406, ISO 1101
tolerances unless otherwise specified: angles 0°±2°; linear .X ±.25/.01, .XX ±.13/.005, .XXX ±.051/.0020
projection
MM/INCH
scale 20:1
product family: SOCKETS
title: MINISERT SOCKET ASS'Y
dwg no: 76693
sheet 1 of 1
size: A3
type: Product Customer Drawing

sheet index	revision	G
	sheet	1

form: A3

FCIconnect.com
Copyright FCI

PDM: Rev:G STATUS:Released Printed: Nov 03, 2010