PART NUMBER	REV	FIRST USED	TERMINATOR	FEED TYPE	DESCRIPTION
1528373-1	B	–	LEADMAKER	MECH POST FEED	CUTS CARRIER
1528373-2	B	–	BENCH	MECH PRE FEED	CUTS CARRIER
1528373-6	B	–	LEADMAKER	MECH POST FEED	CONTINUOUS CARRIER
7-1528373-1	B	–	LEADMAKER	MECH POST FEED	-1 AND SPARE PARTS
7-1528373-2	B	–	BENCH	MECH PRE FEED	-2 AND SPARE PARTS
7-1528373-6	B	–	LEADMAKER	MECH POST FEED	-6 AND SPARE PARTS
7-1528373-7	A	–	–	–	SPARE PARTS KIT

USED ON –

CRIMP DATA DELPHI TERMINAL DELPHI CRIMP SPECS

TERMINAL NAME: GT280 F SEALED (MP280) RECEPT.

CRIMP	SIZE	TYPE	RANGE
WIRE	1.78 [.070 IN]	F	0.50mm² – 1.00mm²
INSUL	4.57 [.180 IN]	O	4.25 MAX [.167 IN MAX] △4

WIRE STRIP LENGTH 4.60 [.181 IN]

APPL INSTRUCTION 408-8322 & 408-8490

TERMINAL APPL SPEC DELPHI VALIDATION SHT DEC00404145 –

FEED 14.00 [.551 IN]

TERMINALS APPLIED

AMP TERM PN	MFR TERM PN	AMP SEAL PN	MFR SEAL PN	–
1572443-1	10726097	1572498-1	15366066	–
–	–	–	–	–
–	–	–	–	–
–	–	–	–	–
–	–	–	–	–
–	–	–	–	–
–	–	–	–	–

WIRE SIZE mm² AWG	CRIMP HEIGHT *	REF SETTING
△6 1.00mm²	1.40 ±0.05 [.055 ±.002 IN]	B7
△6 0.75mm²	1.30 ±0.05 [.051 ±.002 IN]	C5
0.50mm²	1.25 ±0.05 [.049 ±.002 IN]	C9
–	–	–
–	–	–
–	–	–
–	–	–
–	–	–
–	–	–
–	–	–
–	–	–
–	–	–
–	–	–
–	–	–
–	–	–
–	–	–

SET UP GAGE	LAYOUT
458637-3	L1528373

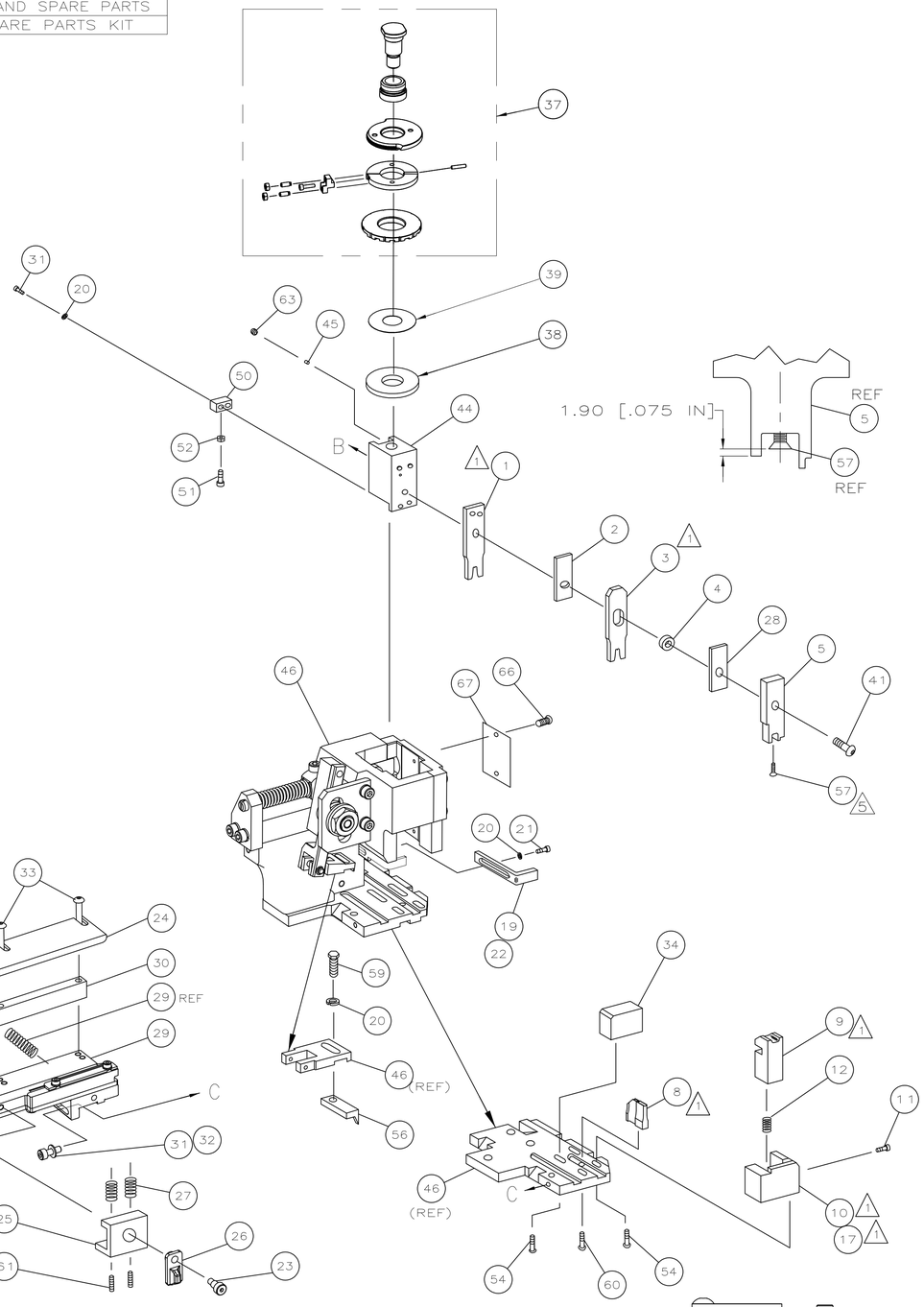

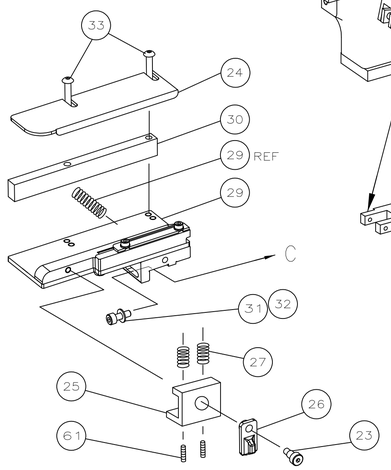

1. RECOMMENDED SPARE PARTS.
2. GREASE RAM, CAM, CAM FOLLOWER AND FEED ROD LIGHTLY.
3. LUBRICATE DAILY PER THE APPLICATOR INSTRUCTION SHEET SUPPLIED WITH THE APPLICATOR.
4. THIS APPLICATOR APPLIES TERMINAL WITH A SEAL. INSULATION DIA QUOTED IS OUTSIDE DIAMETER OF SEAL. WIRE INSULATION DIA IS DEPENDENT ON SEAL BEING APPLIED. SEAL INSULATION RANGE 1.86-2.40mm DIA [.073-.094 IN] TERMINAL INS RANGE 1.40-2.10mm [.083-.083 IN].
5. APPLY TORQ-SEAL IN ALLEN SOCKET TO FILL HOLE AFTER FLAT HD HAS BEEN ADJUSTED TO CORRECT HEIGHT AT QUALIFICATION. APPLY #1-23419-5 LOC-TITE TO THREADS.
6. CRIMP HEIGHTS CALCULATED BY TYCO ELECTRONICS, TO IMPROVE CRIMP CROSS SECTION.

VIEW B ROTATED 180°

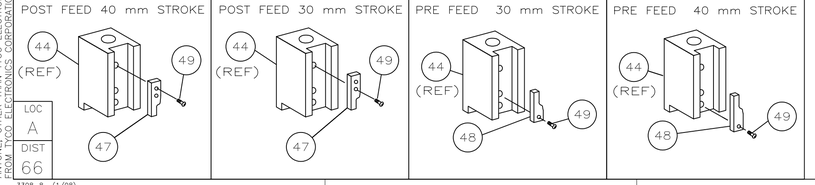

3308-8 (1/08)

* WARNING:

ON INSTALLATION, SET WIRE DISC TO LARGEST WIRE SIZE SETTING. USE OF SETTINGS BELOW MIN REQUIRED CRIMP HEIGHT SETTING WILL CAUSE DAMAGE TO CRIMP TOOLING.

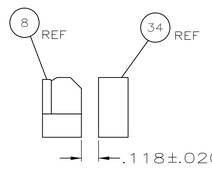

ITEM 34 LOCATION

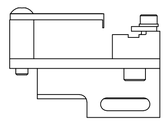

LONG POSITION. GUIDE OFF WIRE BARREL

									73
–	1	1	1	1	1	1	1528373	PRINT, APPLICATOR LOG SHEET	72
–	1	1	1	1	1	1	1338705-3	DOCUMENTATION PACKAGE	71
									70
									69
									68
–	1	1	1	1	1	1	461264-5	PLATE, IDENTIFICATION	67
–	2	2	2	2	2	2	21017-2	SCR,DRIVE(#2x.19)ID PLATE	66
									65
									64
–	1	1	1	1	1	1	3-18031-0	SCR,SKT SET(M6X6)RAM	63
									62
–	2	2	2	2	2	2	2-18032-5	SCR,SET(M5X20)DRAG	61
–	1	1	1	1	1	1	18024-7	SCR,BHC(M4X10)ANVIL	60
–	1	1	1	1	1	1	5-18022-2	SCR,HEX(M4X8)FEED FINGER	59
									58
–	1	1	1	1	1	1	985575-3	SCR,FHC(M3X10)DEP	57
–	1	1	1	1	1	1	1338685-1	PAWL, FEED	56
									55
–	4	4	4	4	4	4	18024-8	SCR,BHC(M4x12)SHEAR HOLDER	54
									53
–	1	1	1	1	1	1	18030-1	NUT,HEX(M3)HOLD DOWN	52
–	1	1	1	1	1	1	811242-5	BUMPER, HOLDDOWN	51
–	1	1	1	1	1	1	690753-2	SPACER, TONKER	50
–	1	1	1	1	1	1	18024-3	SCR,BHC(M3X10)CAM	49
–	–	1	–	–	1	–	1338675-1	CAM, PRE FEED 30 & 40 mm ST	48
–	1	–	1	1	–	1	1338676-1	CAM, POST FEED 30 & 40 mm ST	47
–	1	1	1	1	1	1	1320999-3	APPLICATOR BASIC SUBASSY	46
–	1	1	1	1	1	1	690191-1	PLUG, NYLON	45
–	1	1	1	1	1	1	1338660-1	RAM	44
									43
									42
–	1	1	1	1	1	1	2-18024-6	SCR,BHC(M8X25)RAM	41
									40
–	1	1	1	1	1	1	690125-1	SHIM SUBASSY	39
–	1	1	1	1	1	1	469367-9	SPACER, FINE ADJUST	38
–	1	1	1	1	1	1	879103-2	FINE ADJUST HEAD SUBASSY	37
									36
									35
–	1	1	1	1	1	1	1320934-1	SUPPORT, TERMINAL	34
–	2	2	2	2	2	2	1-18024-0	SCR,BHC(M4X20)STRIP GUIDE	33
–	1	1	1	1	1	1	18027-2	WASHER, FLAT(M4)	32
–	3	3	3	3	3	3	1-18023-2	SCR,SKT CAP(M4X12)MOUNT BLOCK	31
–	1	1	1	1	1	1	1320908-8	SPACER, STRIP GUIDE	30
–	1	1	1	1	1	1	1633073-1	STRIP GUIDE PLATE ASSY	29
–	1	1	1	1	1	1	1-455888-6	SPACER, FRONT SHEAR DEP	28
–	2	2	2	2	2	2	1-22284-0	SPRING, DRAG	27
–	1	1	1	1	1	1	356835-1	LEVER, DRAG RELEASE	26
–	1	1	1	1	1	1	240792-1	DRAG, TERMINAL	25
–	1	1	1	1	1	1	1320928-1	PLATE, STRIP GUIDE	24
–	1	1	1	1	1	1	980371-4	SCR,SHC SHLD	23
–	1	–	1	1	–	1	690472-2	STRIPPER	22
–	1	1	1	1	1	1	1-18023-1	SCR,SHC(M4X10)STRIPPER	21
–	4	4	4	4	4	4	18025-2	WASHER,LOCK(M4)STRIPPER	20
–	–	1	–	–	1	–	690472-1	STRIPPER	19
									18
△1 –	1	–	–	1	–	–	1338684-2	HOLDER, SHEAR, FRONT (NO-CUT)	17
									16
									15
									14
									13
–	1	1	1	1	1	1	3-22280-3	SPRING, SHEAR	12
–	1	1	1	1	1	1	356885-5	STOP, SHEAR	11
–	–	1	1	–	1	1	1-1320921-0	HOLDER, SHEAR, FRONT (CUT)	10
△1 –	1	1	1	1	1	1	318707-3	SHEAR, FLOAT (FRONT)	9
1	2	2	2	1	1	1	5-1333203-9	ANVIL	8
									7
									6
–	1	1	1	1	1	1	1338680-2	DEPRESSOR, SHEAR (FRONT)	5
–	1	1	1	1	1	1	238011-2	SPACER, BLOCK CRIMPER	4
△1 1	2	2	2	1	1	1	4-456135-9	CRIMPER, INSULATION	3
–	1	1	1	1	1	1	1-455888-0	SPACER, CRIMPER	2
△1 1	2	2	2	1	1	1	456404-9	CRIMPER, WIRE	1
	-77	-76	-72	-71	-6	-2	-1	PART NO	DESCRIPTION / ITEM NO
								QTY REQD PER ASSY	PARTS LIST

P	LTR	REVISION RECORD	DATE	DWN	APVD
	B	ECR-11-004573	3-2011	MY	TE

DIMENSIONS: INCHES

TOLERANCES UNLESS OTHERWISE SPECIFIED: 0 PLC ± – ; 1 PLC ± – ; 2 PLC ± – ; 3 PLC ± – ; 4 PLC ± –

ANGLES ± –

SURFACE TEXTURE –√

DWN L.LOFTHOUSE	06APR04	MATERIAL – –	HEAT TREAT – –
CHK –			
APVD F.BACKHURST	06APR04	Tyco Electronics Corporation Harrisburg, PA 17105-3608	
NAME FINE ADJ SIDE FD HD-I APPL			
SCALE –	SIZE A1	DRAWING NO 1528373	SHEET 1 OF 1 REV B

CUSTOMER ACCESSIBLE PRODUCTION DRAWING

THIS DRAWING IS A CONTROLLED DOCUMENT. DWG NO 1528373

THIS INFORMATION IS CONFIDENTIAL AND PROPRIETARY TO TYCO ELECTRONICS CORPORATION AND ITS WORLDWIDE SUBSIDIARIES AND AFFILIATES. IT MAY NOT BE DISCLOSED TO UNAUTHORIZED PERSONS WITHOUT WRITTEN AUTHORIZATION FROM TYCO ELECTRONICS CORPORATION, HARRISBURG, PENNSYLVANIA USA.