REVISIONS				
ZONE	REV.	DESCRIPTION	DATE	APPROVED
	X	Outlet Definition		WB
	1	Saftey and Regulatory	2/19/2016	WB
	2	Production Level Spec.	3/21/2016	WB

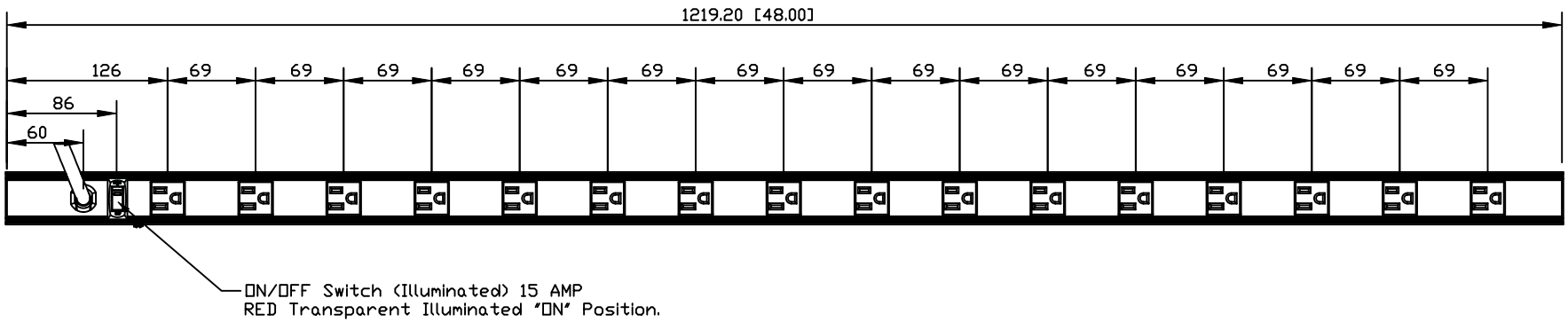

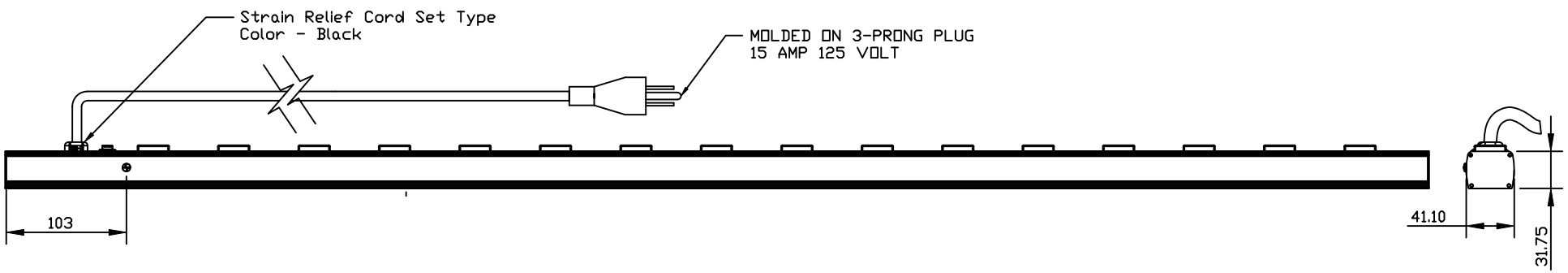

Part Description	Zero U Rack Mount PDU, 16 Outlets, 15A WMP, Circuit Breaker
Delta Part Number	PDU1615-VM
Finish	Powder Coat Black
Saftey	UL/cUL (UL1363)
Cord Length & AWG	15' (14 AWG x 3)
Connector - AC Input	NEMA 5-15P
Connector - AC Output	NEMA 5-15R

DELTA 達電子工業股份有限公司 LTA ELECTRONICS, INC.

THESE DRAWINGS AND SPECIFICATIONS ARE THE PROPERTY OF DELTA ELECTRONICS, INC. AND SHALL NOT BE REPRODUCED OR USED AS THE BASIS FOR THE MANUFACTURE OR SELL OF APPARATUSES OR DEVICES WITHOUT PERMISSION.

DIMENSIONAL TOLERANCES

Drawn:	ID-3D Design
Safety:	
Design:	
Layout:	
Checked:	
IE:	
Approved:	W.Bradshaw
EE. Chk:	
Material:	Aluminum
EE. Apvd:	
Description:	ZERO U VERTICAL MOUNT PDU
Part No.	PDU1615-VM
REV.	2
A2 SIZE	
SHEET 1 OF 1	
ISSUE DATE: 23 MAR 16	
SCALE	
UNIT	MM
USED ON	