NOTES:

1.0 ELECTRICAL SPECIFICATIONS:
- 1.1 FREQUENCY RANGE: 0.5 to 18.0 GHz.
- 1.2 INSERTION LOSS: (0.3 + 0.2f)dB
  WHERE f = FREQUENCY IN GHz
- 1.3 ISOLATION: 18dB MIN.
- 1.4 VSWR (MAX): INPUT 1.70:1
  OUTPUT 1.50:1
- 1.5 OUTPUT UNBALANCE:
  - 1.5.1 AMPLITUDE: 0.3dB MAX.
  - 1.5.2 PHASE: 10° MAX.
- 1.6 MAXIMUM INPUT POWER: 10 WATTS
  (WITH OUTPUT LOADS OF VSWR < 2.0:1)

2.0 FINISH:
- 2.1 GREY PER MIL-E-15090 TYPE II, CLASS 2
  OVER MIL-C-5541 CLASS 3A
  MEETS MIL-F-14072
  MEETS MIL-E-5400
- 2.2 MARKING: MARK UNIT AS SHOWN.
  (REF.: SLK-08048-82-04)

3.0 DIMENSIONS IN PARENTHESIS ARE IN MILLIMETERS.

MODEL NUMBER: PWD-5530-02-TNC-79

REV.: B1

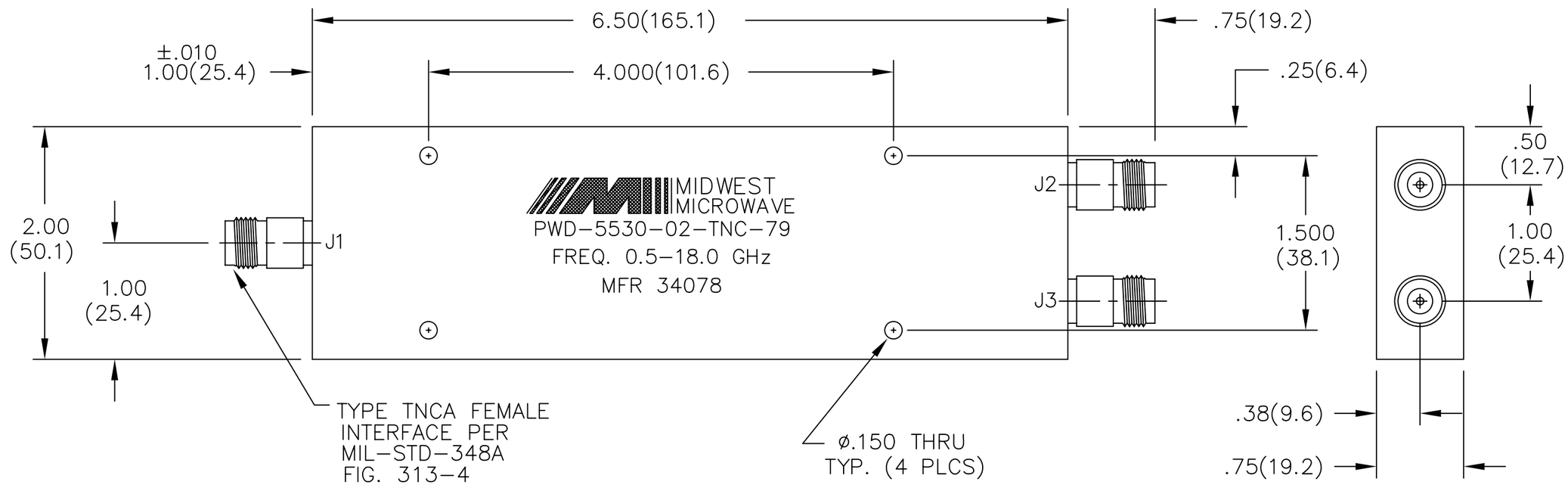

REV.	DESCRIPTION	DATE
–	RELEASED	4/8/99
A	ECN 16972	2-10-99
B	ECN 17077	4/6/99
B1	ADDED TITLEBLOCK	7/20/05

UNLESS OTHERWISE NOTED DIMENSIONS ARE IN INCHES AND TOLERANCES ARE:

3 PLACE DECIMALS ±.005
2 PLACE DECIMALS ±.02
FRACTIONS ±1/64
PARALLELITY: T.I.R. _____
FLATNESS: T.I.R. _____
CONCENTRICITY: T.I.R. _____
ANGLES AND PERPENDICULARITY: ±1°

FSCM NO. 34078

MIDWEST MICROWAVE

NOTICE: The information contained in this drawing is proprietary and must not be used without the permission of Midwest Microwave

TITLE: POWER DIVIDER

DRAWN/DATE	ENG./DATE	CHECKED/DATE	APPROVED/DATE
J.VERNON 2/20/98	P.GOODMAN 4/7/99		

DRAWING NUMBER: PWD-5530-02-TNC-79

SCALE: 1=1 SHEET 1 of 1