DRAWING MADE IN THIRD ANGLE PROJECTION
THIS DRAWING IS UNPUBLISHED. RELEASED FOR PUBLICATION ,19 .
© COPYRIGHT 19 BY AMP INCORPORATED. ALL INTERNATIONAL RIGHTS RESERVED.

LOC	DIST
FT	8

REVISIONS

P	F	ZONE	LTR	DESCRIPTION	DATE	APPD
			O	RLSE PER NPR 3588, WAS 90-4883-31	6-21-91	–
			A	ADDED -5 PER NPR 4275	07/22/92	SK
			B	ADDED -6 PER NPR 4287	07/30/92	RK
			C	ADDED -7 & -8 PER NPR 4304	08/12/92	SK
			C1	ADDED -9 PER NPR 5009	12/15/93	TC
			D	REV PER ECN 0020-430-94	04/28/94	TC
			E	ADDED 1--0 PER EC 0020-1216-94	11/10/94	TC
			F	REV PER EC 0020-216-95	03/27/95	TC
			G	REV PER EC 0020-318-95	05/05/95	TC
			H	ADDED 1--1 PER EC 0320-46-96	11 SEP 96	MM
			J	OBS -5, -6 & -8 PER EC 0020-598-96	07 JAN 97	MM

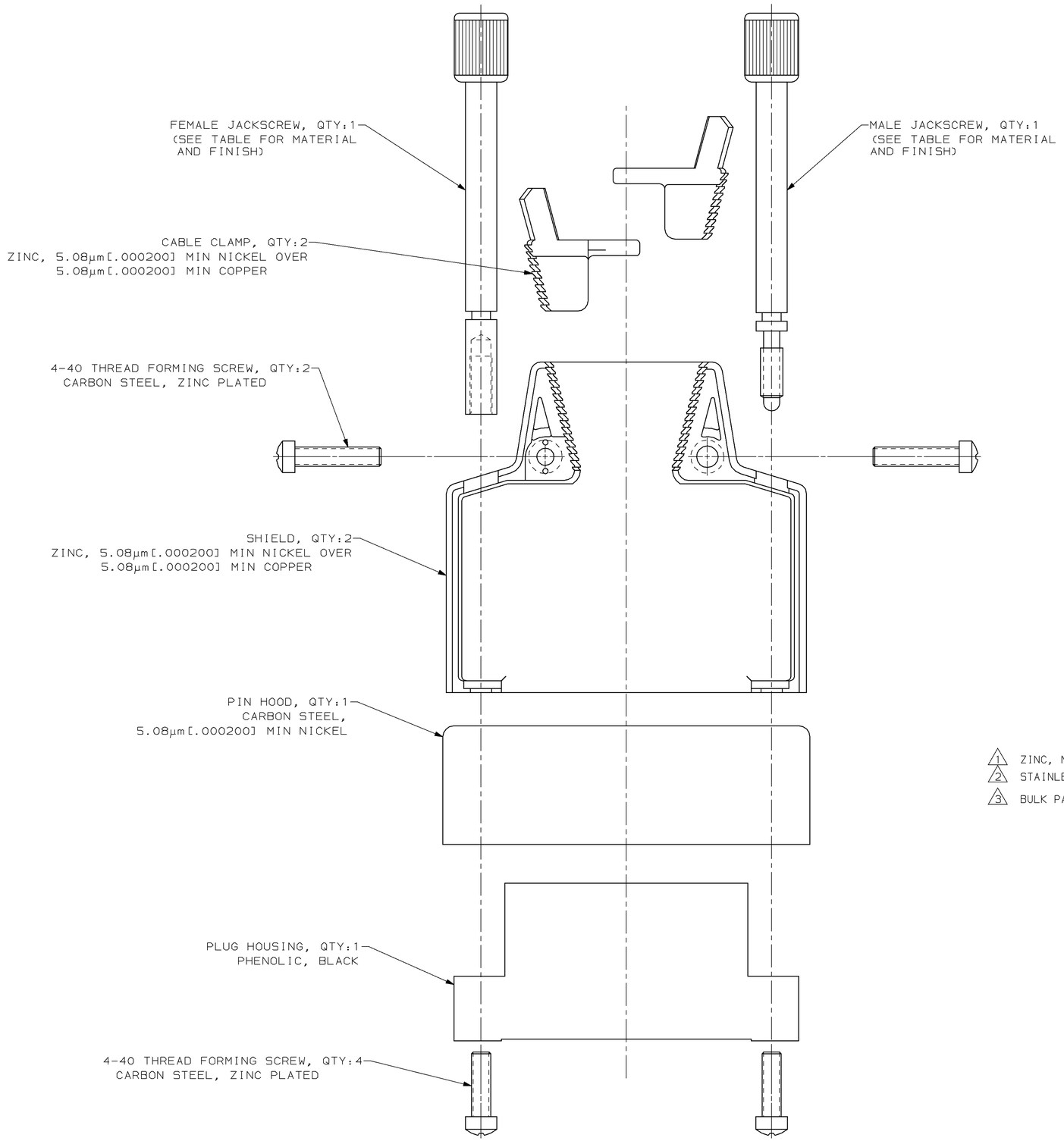

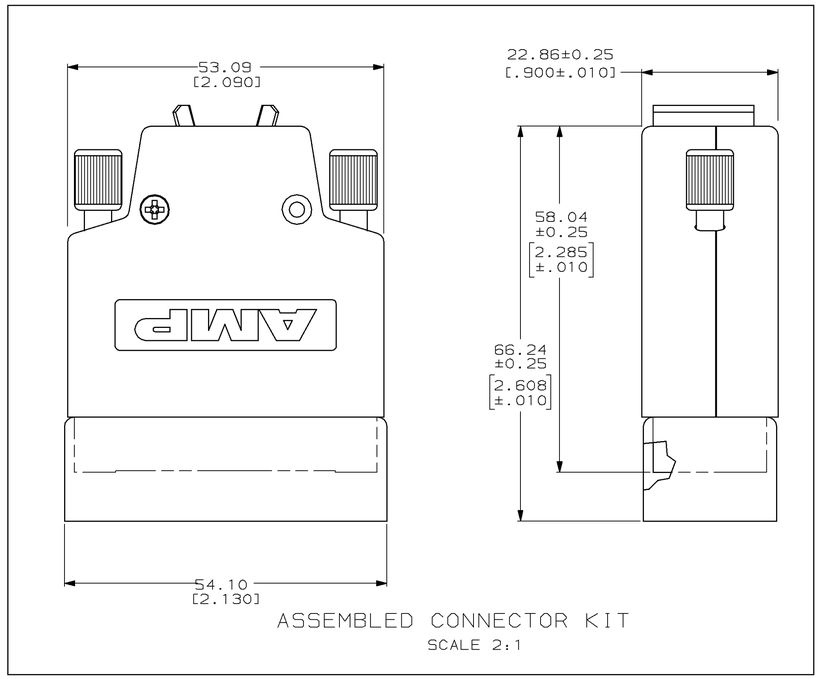

ASSEMBLED CONNECTOR KIT
SCALE 2:1

1. ZINC, NICKEL PLATED.
2. STAINLESS STEEL.
3. BULK PACKAGED.

3	1	YES	3.81-7.62 [.150-.300]	1-213684-1
	1	NO	3.81-7.62 [.150-.300]	1-213684-0
	1	YES	3.81-7.62 [.150-.300]	213684-9
OBSOLETE	2	NO	6.35-10.16 [.250-.400]	213684-8
	2	NO	10.16-15.24 [.400-.600]	213684-7
OBSOLETE	2	YES	6.35-10.16 [.250-.400]	213684-6
OBSOLETE	2	YES	10.16-15.24 [.400-.600]	213684-5
	1	YES	6.35-10.16 [.250-.400]	213684-4
	1	YES	10.16-15.24 [.400-.600]	213684-3
	1	NO	6.35-10.16 [.250-.400]	213684-2
	1	NO	10.16-15.24 [.400-.600]	213684-1
	JACKSCREW	PIN HOOD	CABLE DIAMETER	PART NO

DO NOT SCALE PRINT.
UNLESS SPECIFIED
DIMENSIONS IN mm [INCHES]
TOLERANCES ON ,
2 PLC DEC ± 0.13[.005]
3 PLC DEC ± -
ANGLES ± -

MATERIAL: SEE CALLOUTS

FINISH: SEE CALLOUTS

DR 6-21-91 W.G.LENKER
CHK 6-27-91 R STONE
APPD 6-28-91 A BOULLIANNE
APPD 6-28-91 A BOULLIANNE

PRODUCT SPEC: –

APPLICATION SPEC: –

WEIGHT –

AMP Incorporated
Harrisburg, PA 17105-3608

NAME: CONNECTOR KIT, UNASSEMBLED, 34 POSITION, M SERIES

SIZE D | CAGE CODE 00779 | DRAWING NO 213684

SCALE 3:1 | SHEET 1 OF 1

CUSTOMER DRAWING